Lite 2

40100059

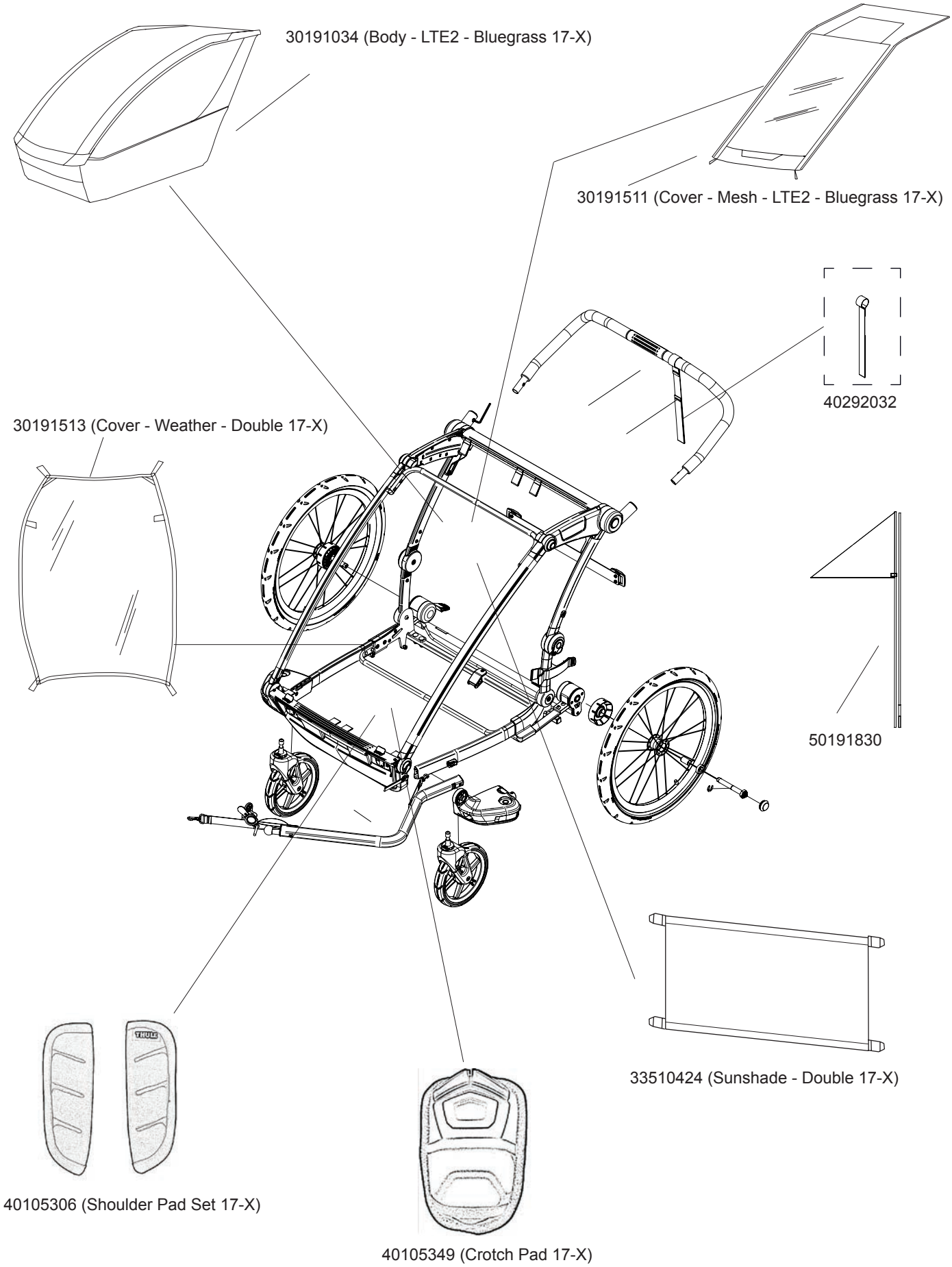

Lite 2

40100059

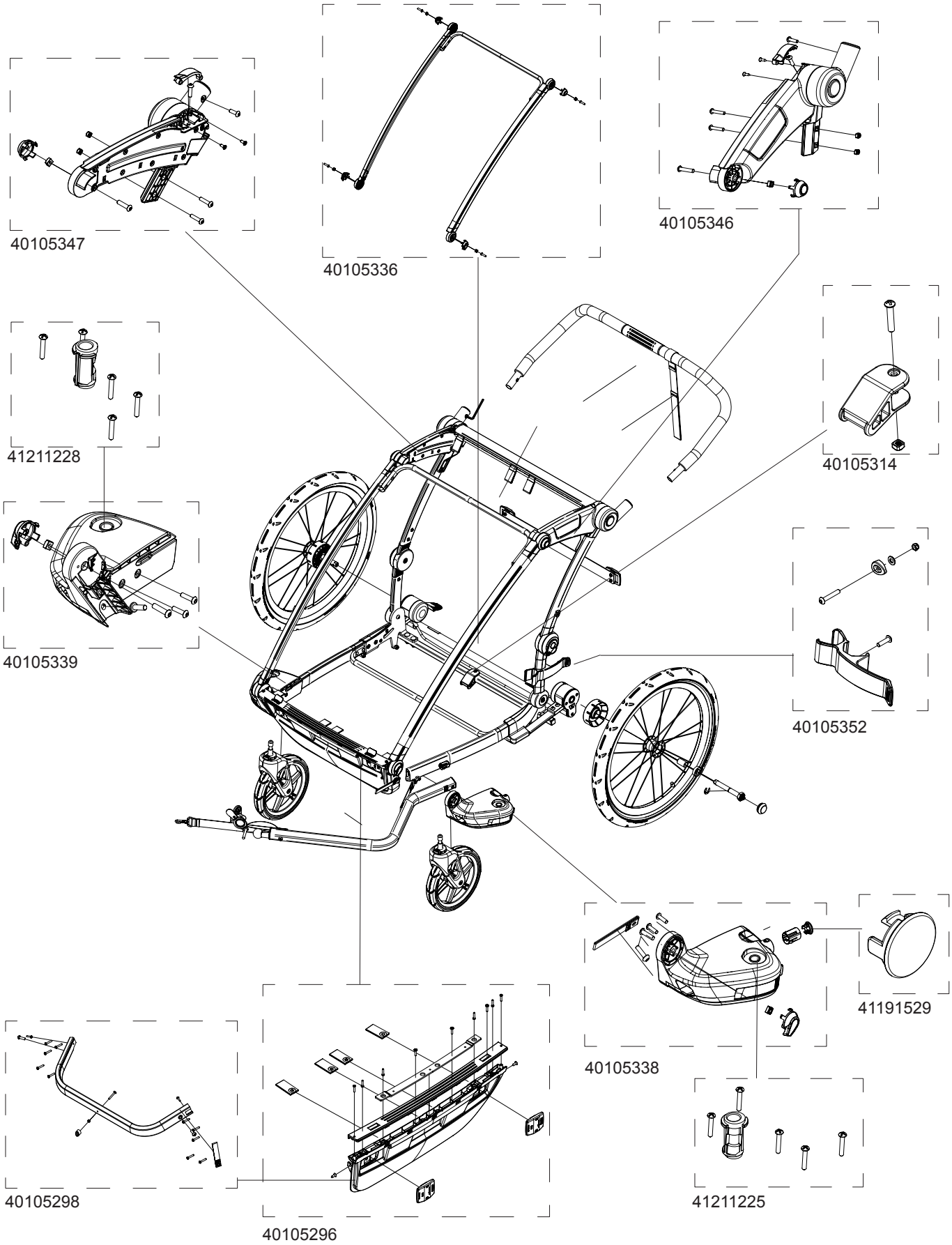

Lite 2

40100059

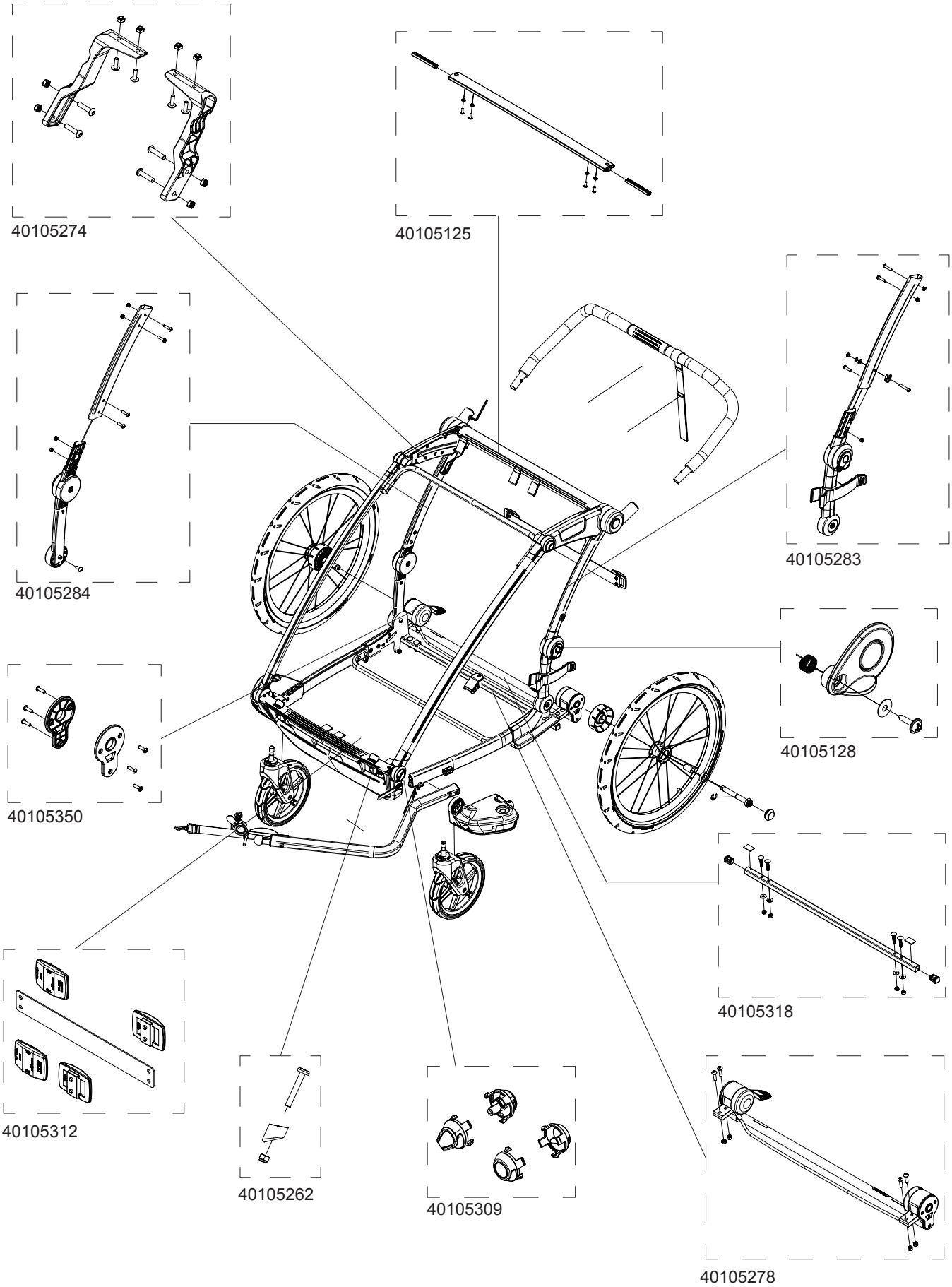

Lite 2

40100059

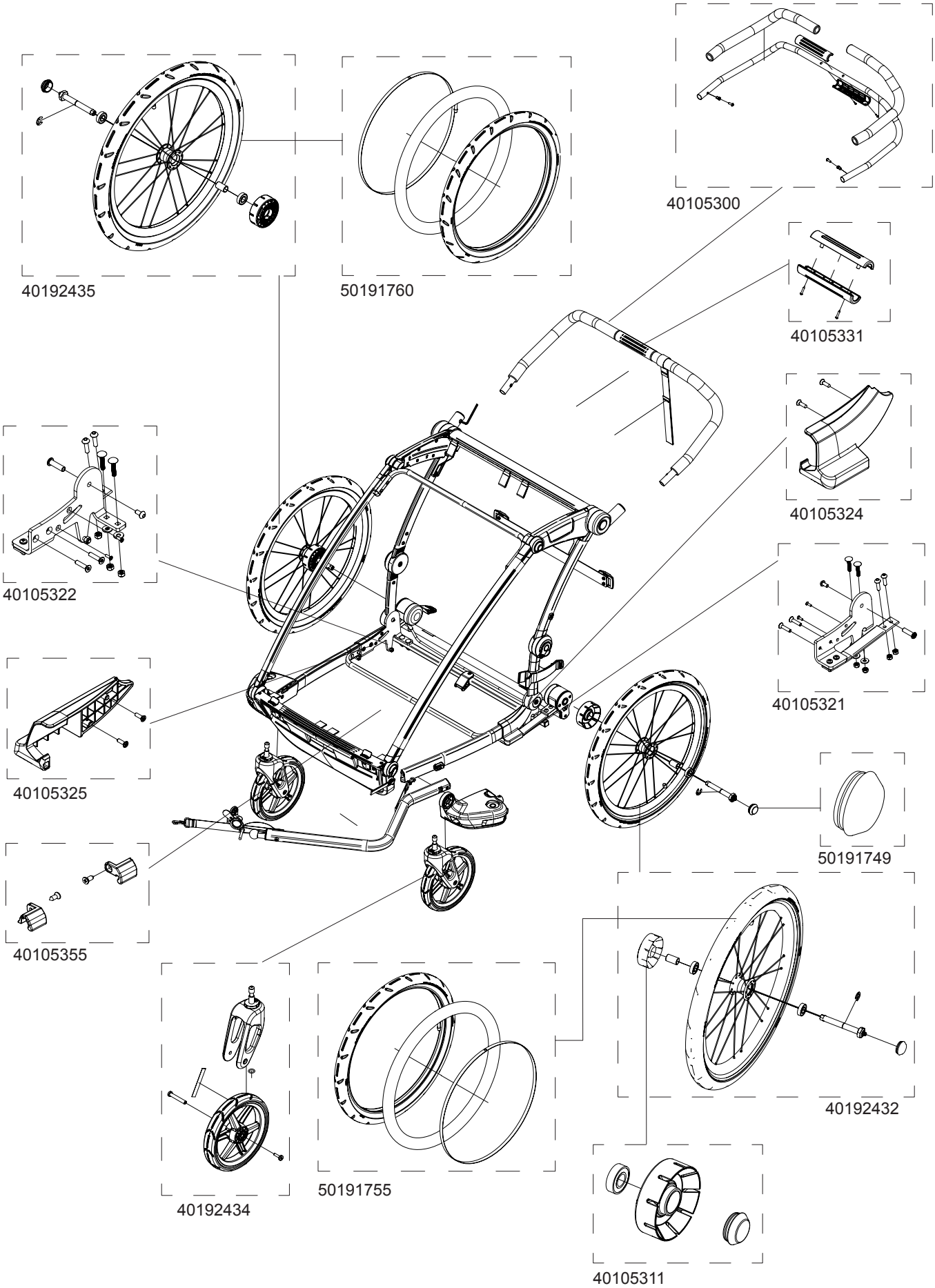

Bundled Kits
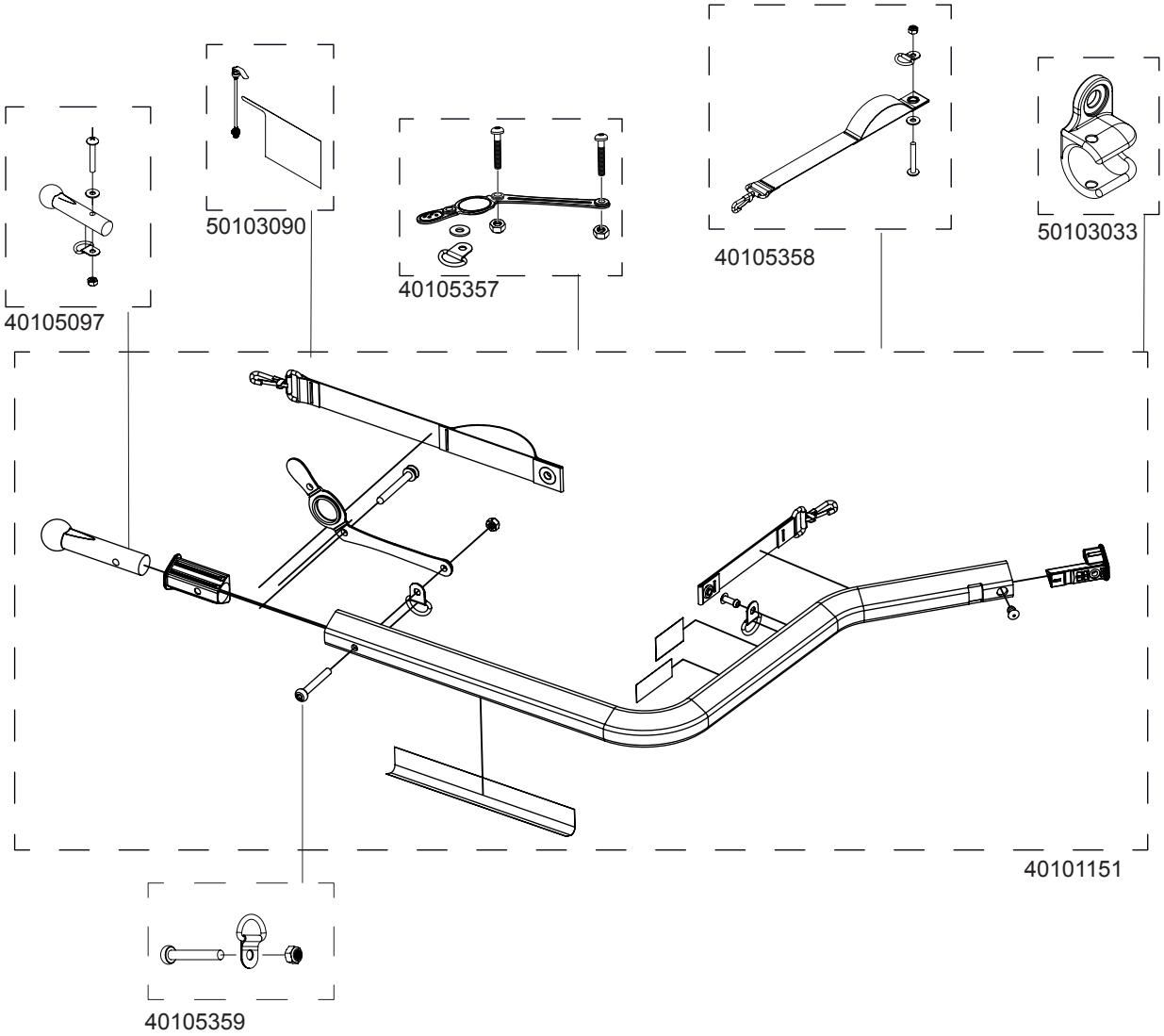
Hitch Arm Assembly